# CHECKOUT & LAUNCH CONTROL SYSTEM

## RTPS Software Architecture

**Larry Wilhelm - System Software**

**April 23, 1997**

# CLCS Software Goals & Principles

**Goals:**

- **Reduce costs by using:**
  - **Code re-use**
  - **COTS**
  - **Labor saving tools**
  - **Standards**

- **Provide a layered, modular, real-time architecture**
- **Provide a scaleable architecture**
- **Provide increased system intelligence**
- **Provide fast, reliable messaging without a CDBFR**

# CLCS Software Goals & Principles

**Goals:**

- **Increased data validity, link health**
- **Increased redundancy**
- **Capability to debug on the desktop**
- **Expanded capability to display data to offices**
- **Expanded capability to provide much more data**
  - **Video Data**
  - **“Business data”**
  - **Access to other KSC and non-KSC systems**
  - **Email**

# CLCS Process Layers

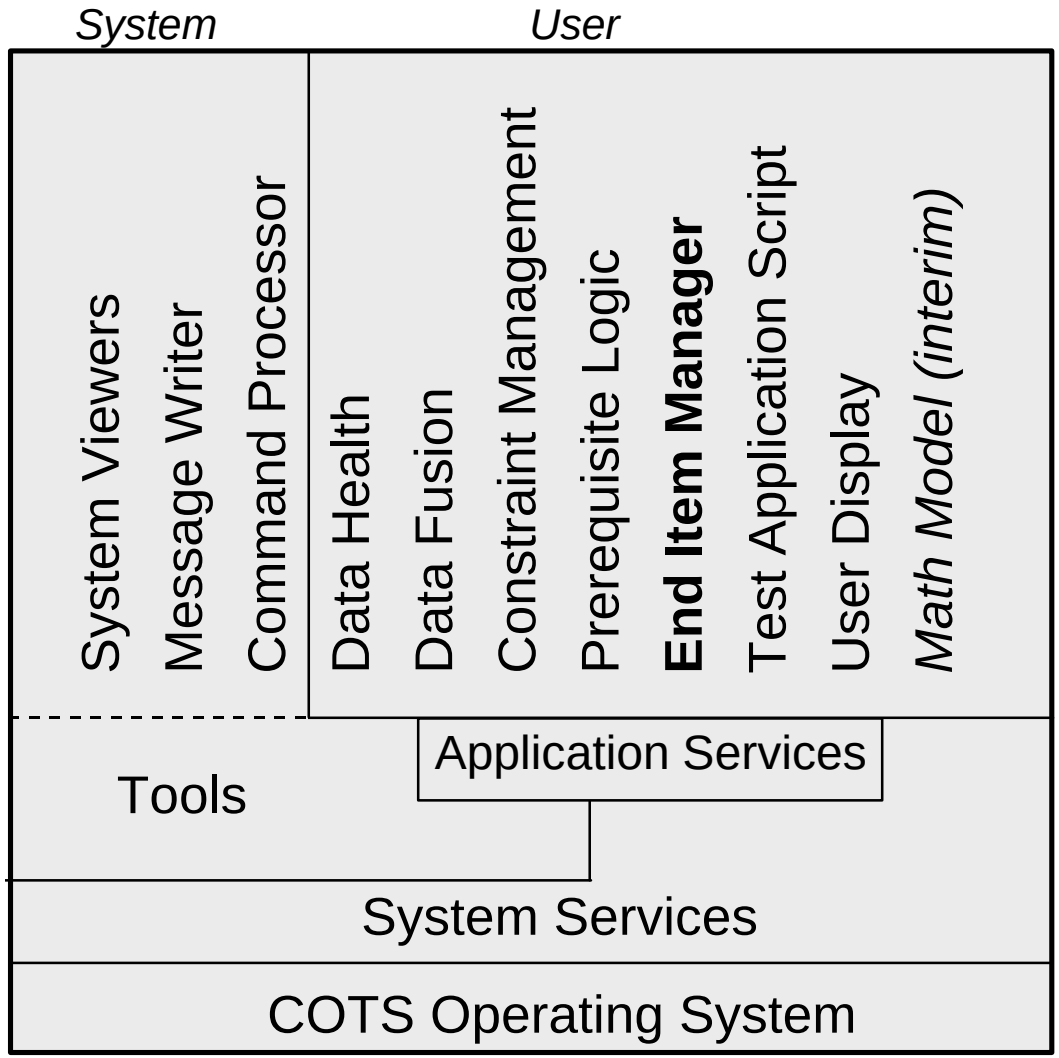


Notes

- Logical view independent of hardware allocation
- Components may reside in a single computer or be distributed in many
- Apps gain efficiencies by direct calls to A/S
- Scaleable architecture
- Logical connection
- Productivity leverage
- Application foundation

# CLCS Standard Configuration

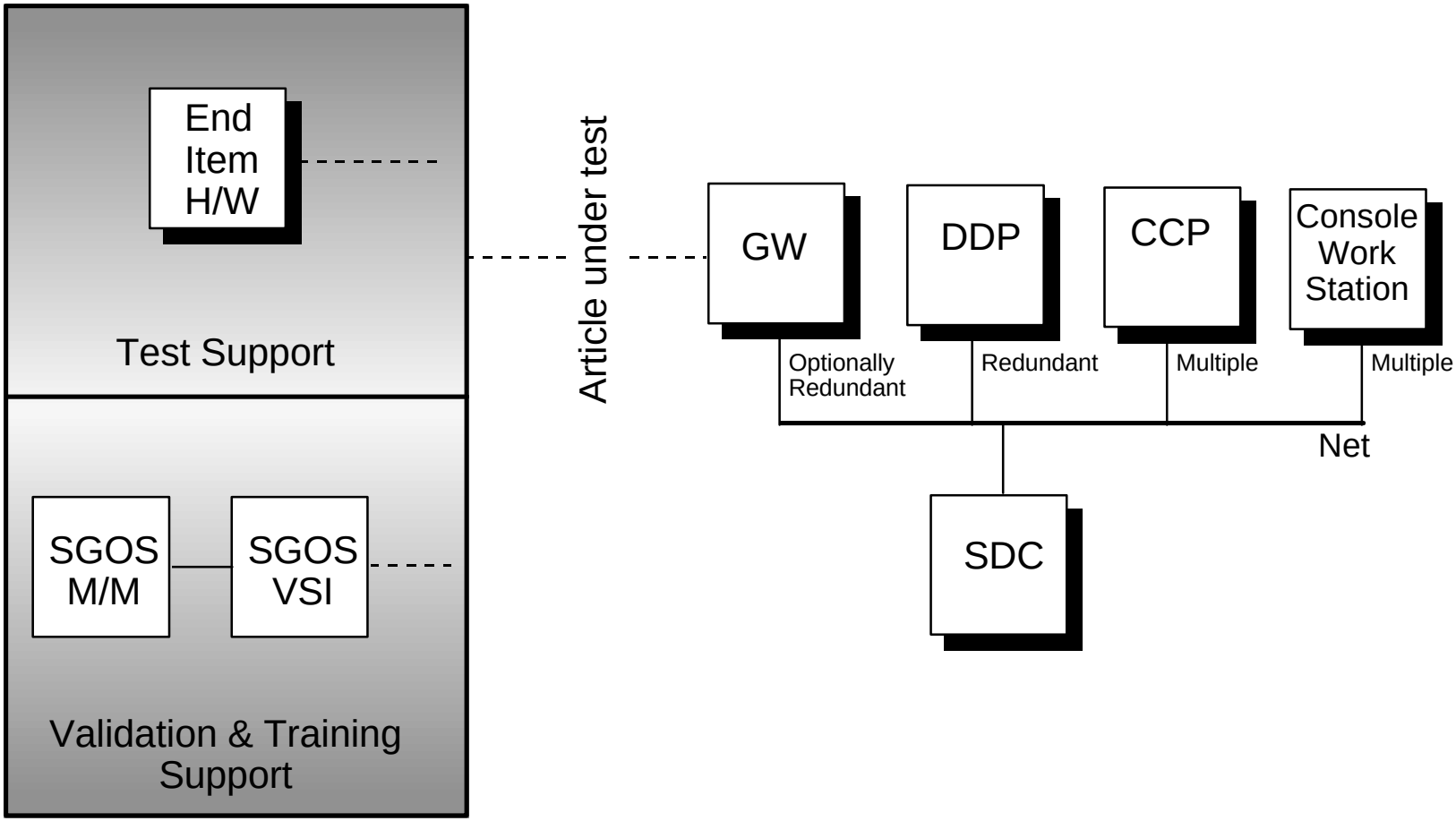

# CLCS Standard Configuration

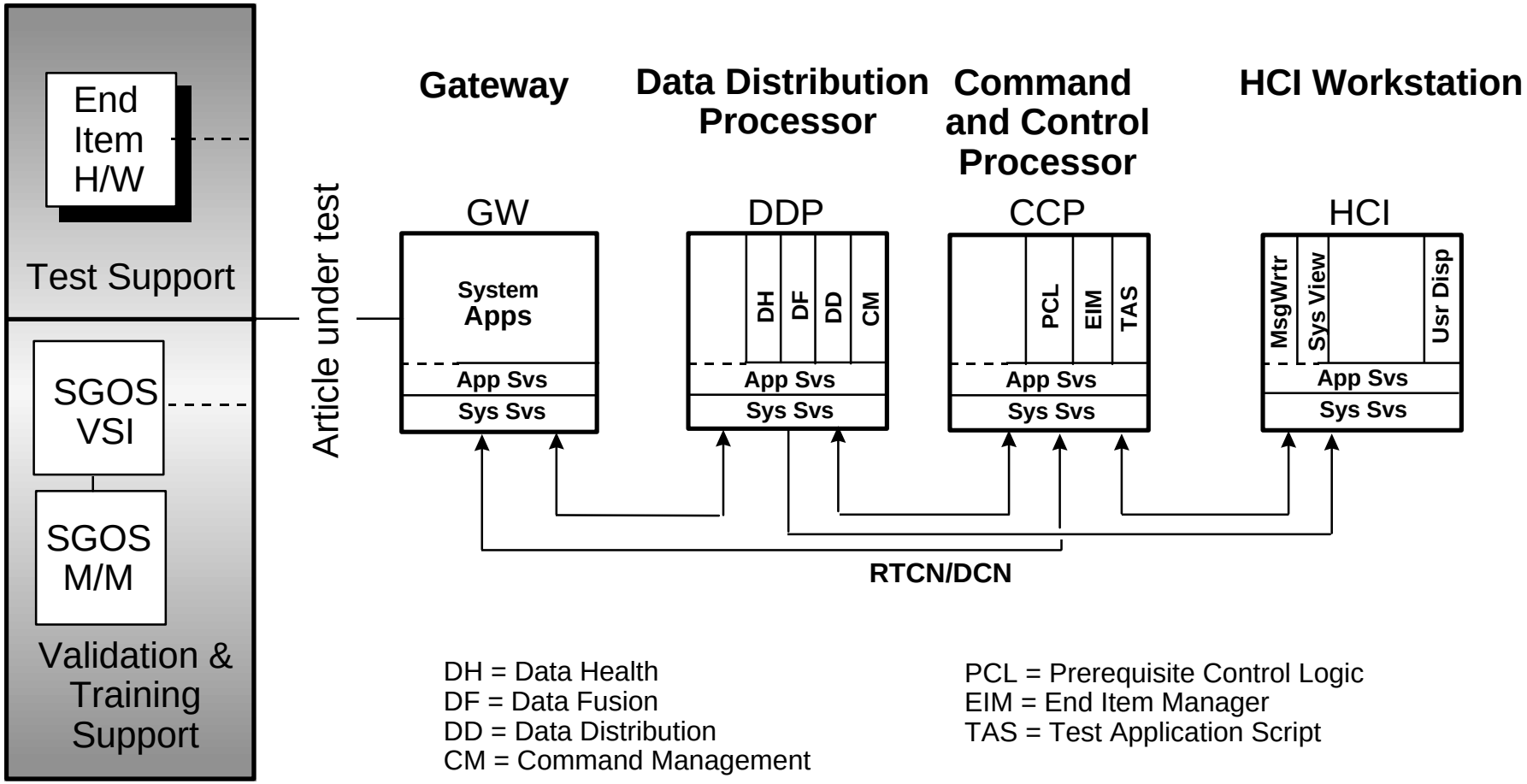


DH = Data Health
DF = Data Fusion
DD = Data Distribution
CM = Command Management

PCL = Prerequisite Control Logic
EIM = End Item Manager
TAS = Test Application Script

# CLCS Application Debug Configuration

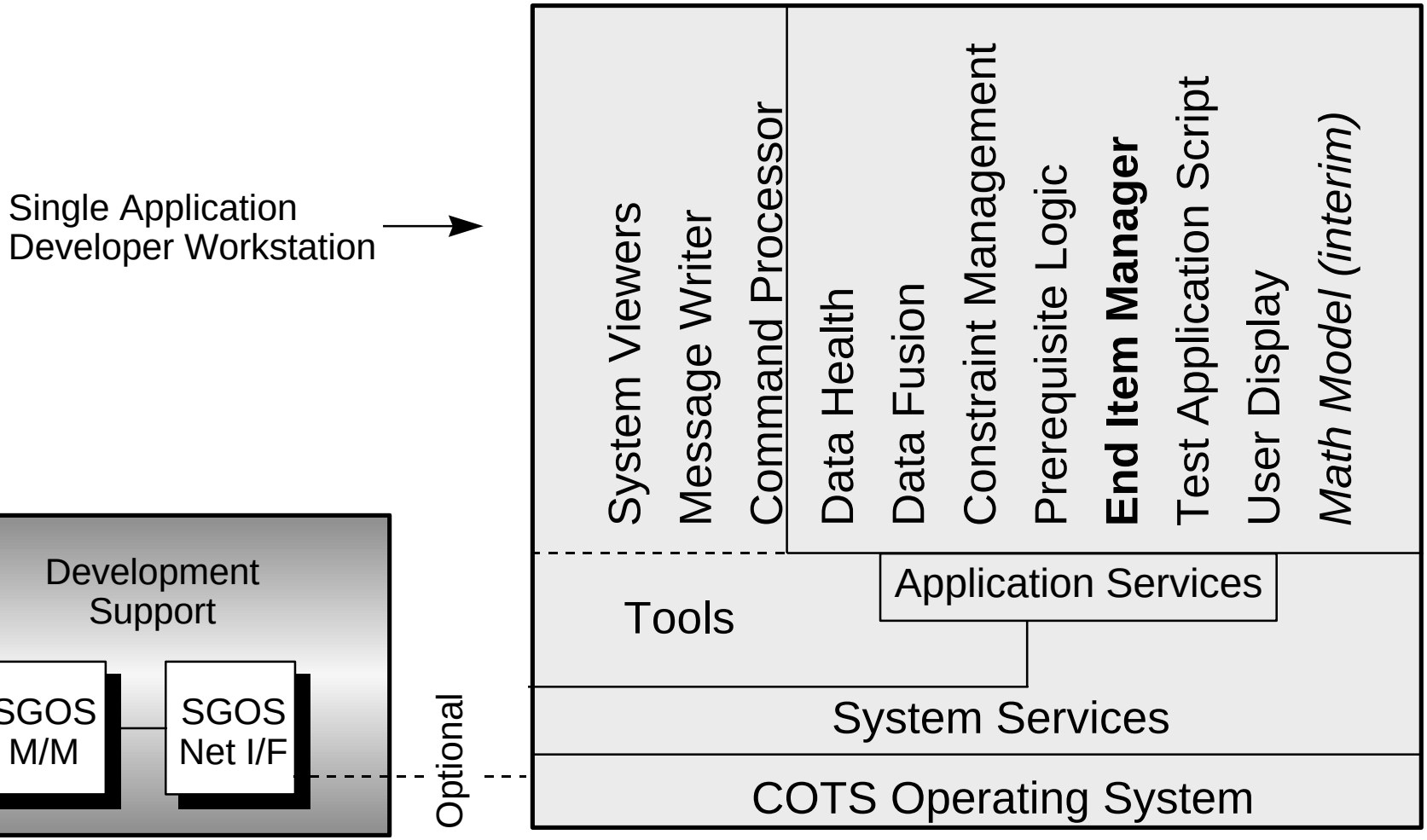

**Insert Redstone S/W Architecture Chart**

# CLCS System Software CSCI Structure

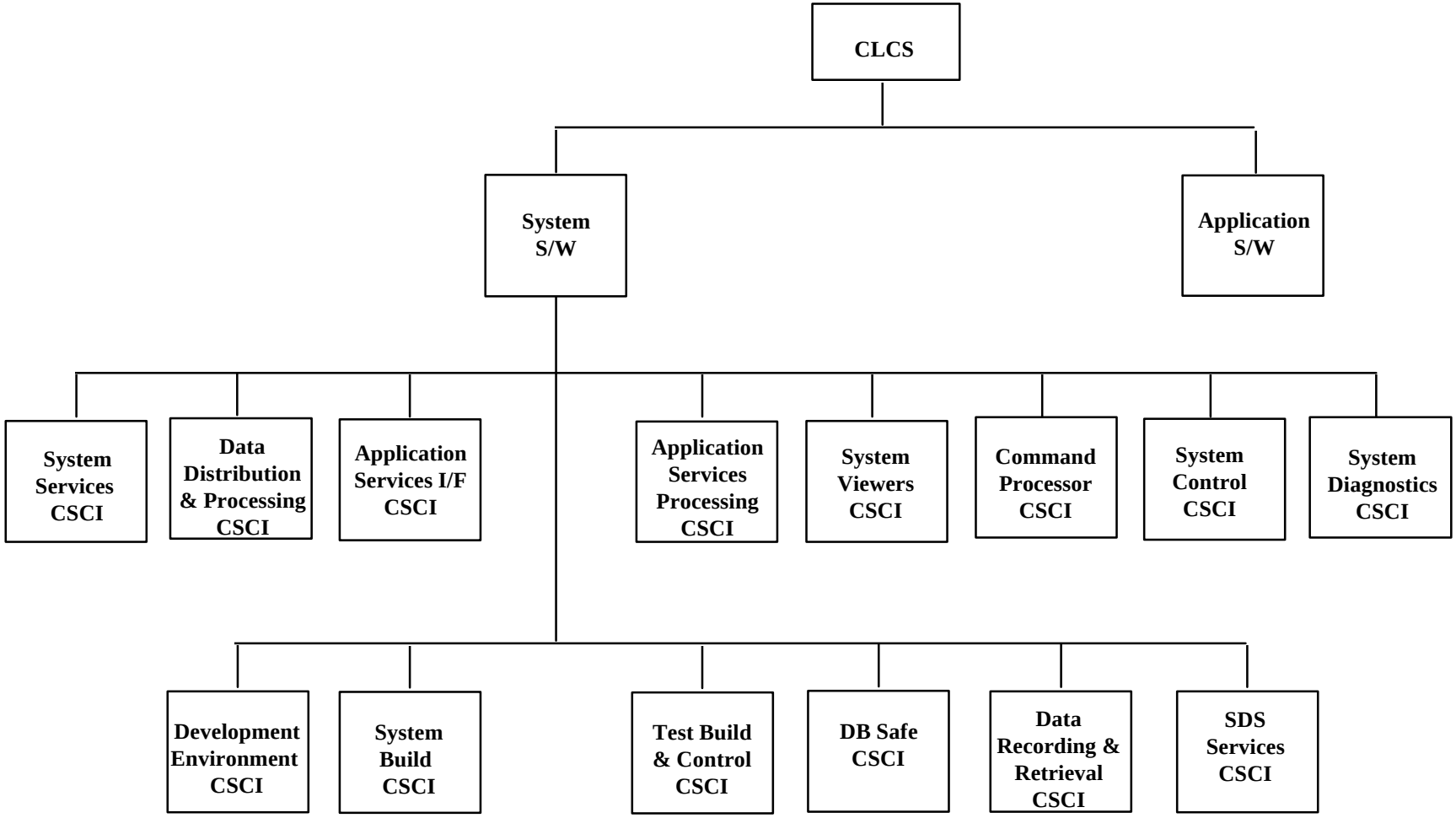

# CLCS System Software CSCI/CSC Structure

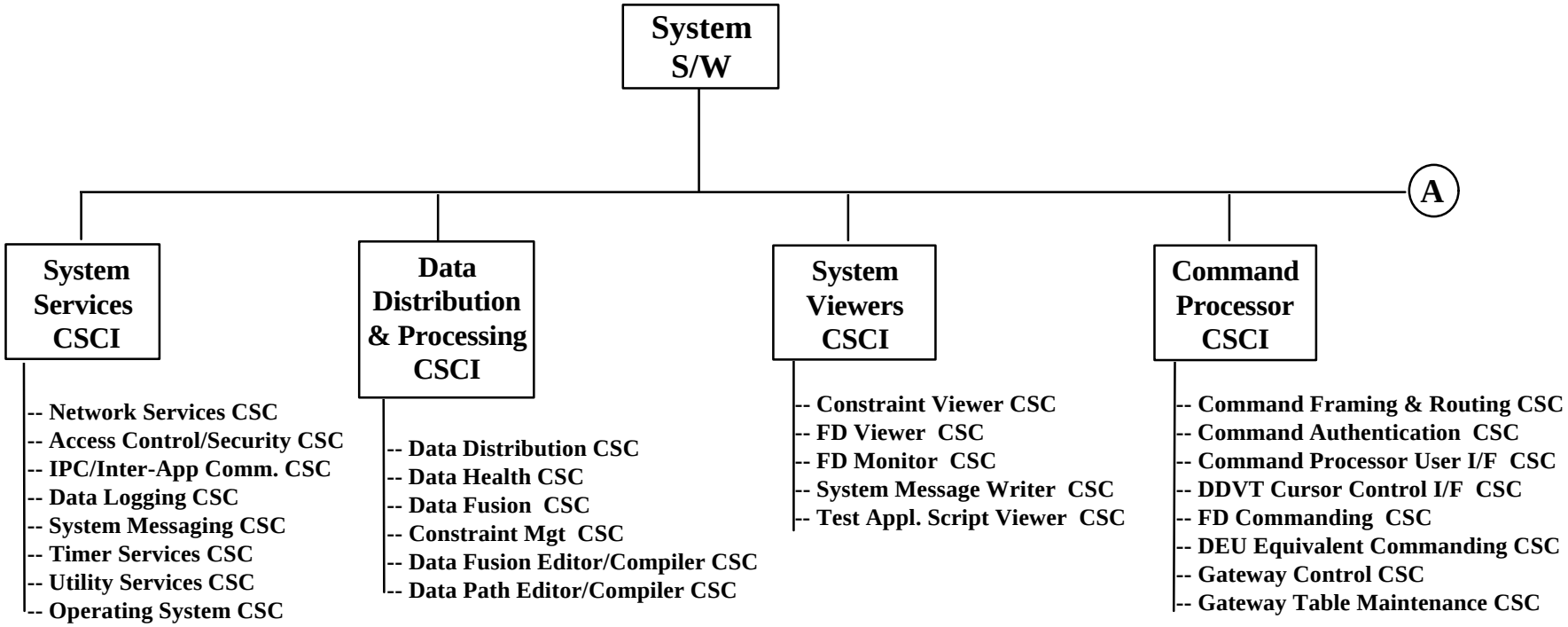

# CLCS System Software CSCI/CSC Structure - Cont.

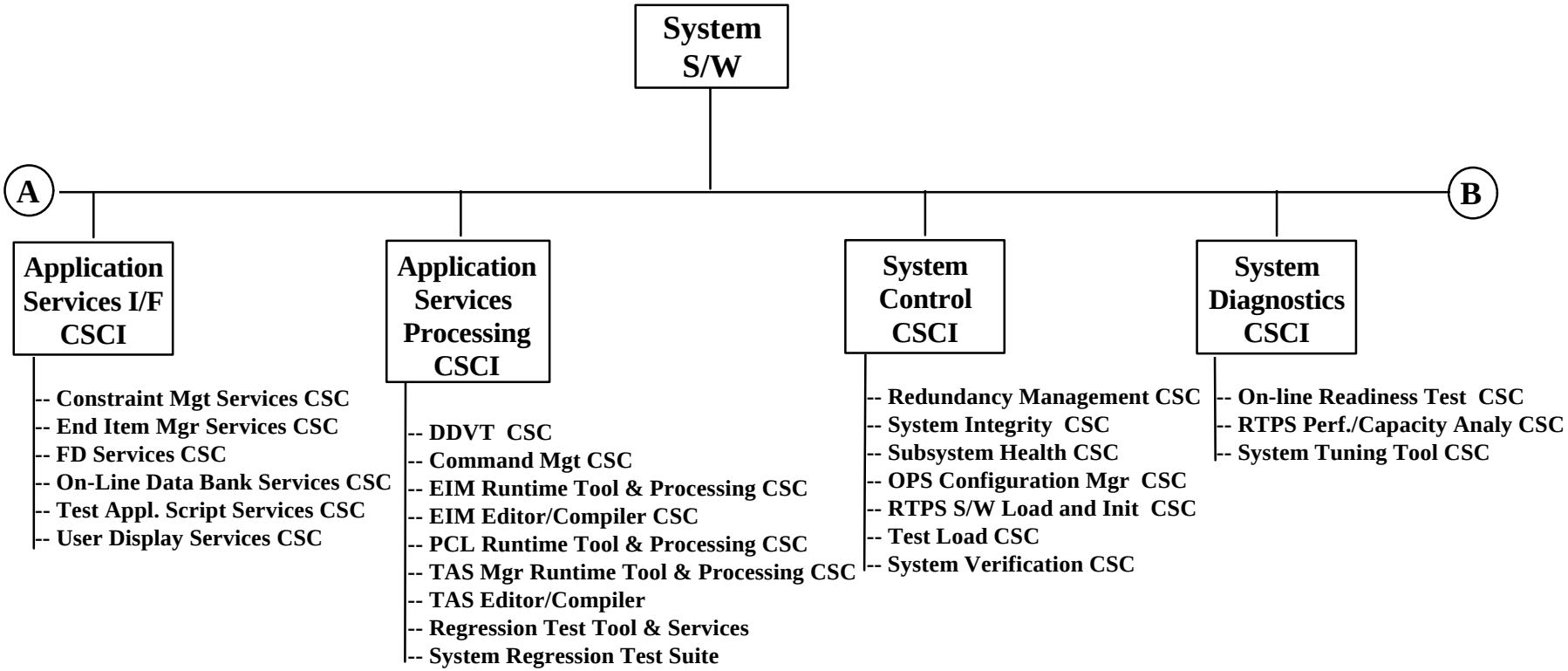

# CLCS System Software CSCI/CSC Structure - Cont.

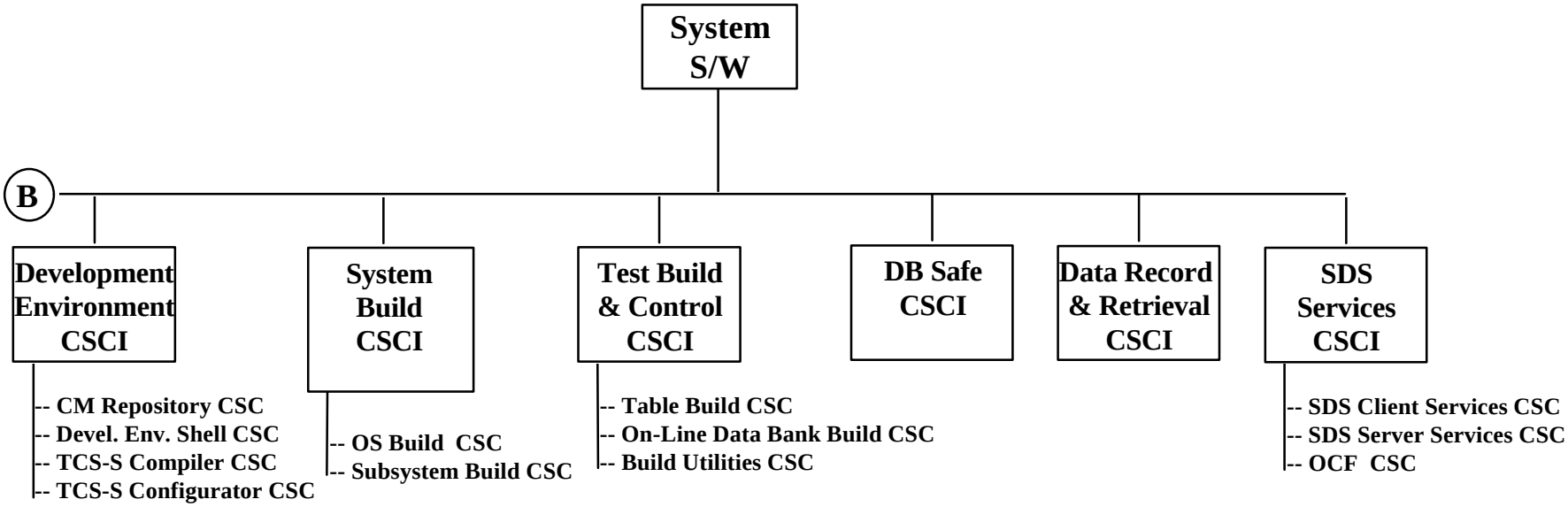

# Application Integration Team (AIT)

***System App WG***
- Defines Sys App CSCIs
- Defines required services
- Lead: Jack Blackledge

***User App Class WG's***
- Defines functional rqmts
- Defines phasing
- Defines required services
- Aids in tool study
- Implements pathfinder

Leads:
- DF/DH: Liz Randall
- UDisp: Barb Kerschner
- EIM: Rich Ikerd
- CM: Al Menendez
- Arch: Rich Ikerd

***Application Testbed Env.***
- Defines App Class Dev approach
- Tool integration approach
- Lead: Doug Hammond

***AIT* Lead:** John Wilkinson
- Coordinates team inputs

***Test Build WG***
- Defines build products & CSCIs
- Defines build approach
- Lead: Charla King

***App Services WG***
- Defines App Services
- Maps A/S to S/S
- Lead: Jon Selcer

**SAT(Software Arch. Team)**
- Jim Trawick
- John Copella
- Pete Simons
- Rodney Davis

***System Services WG***
- Defines System Services
- Insures portability
- Lead: Oscar Brooks

# Software Architecture Team (SAT)

**SAT:**
John Wilkinson -Lead
- Jim Trawick
- John Copella
- Pete Simons
- Rodney Davis

## SAT Charter: Ensure a correct subsystem design

- **View each subsystem as a platform rather than a CSCI**
- **Assist each CSCI Lead with the software design of the DDP, CCP and workstations**
- **Resolve subsystem software design issues**
- **Mediate design interfaces between CSCIs**
- **Ensure subsystem performance is achieved**
- **Implement AIT control concepts**
- **Resolve issues and provide solutions to System Engineering**

# Software Development Process

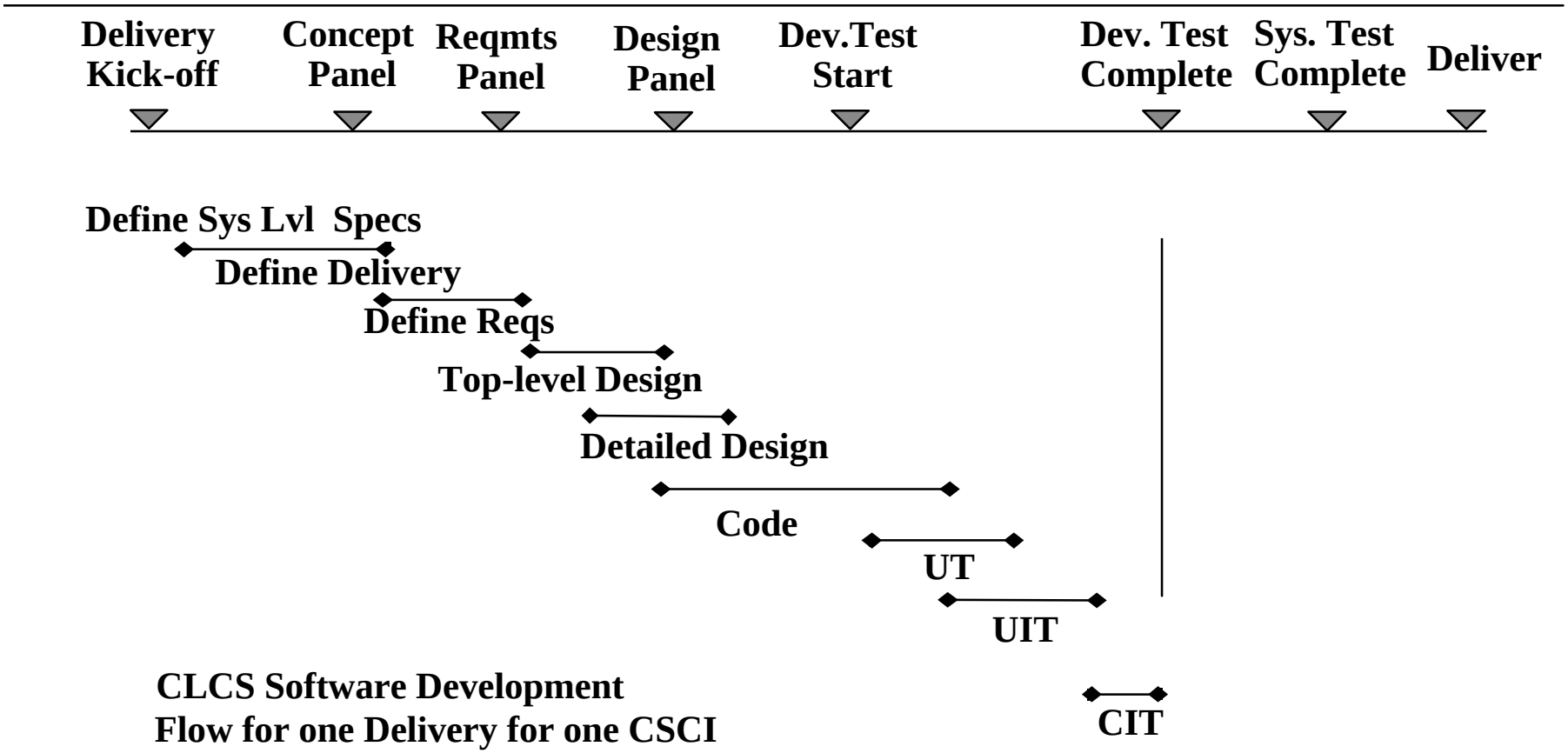


**CLCS Software Development Flow for one Delivery for one CSCI**

# CLCS Configuration Management

- The CM group manages the configuration of all products: documents, drawings, designs, test plans/results, and software items
- All products are kept in the CM repository where access is controlled and monitored
- Everyone on CLCS has read access to the CM repository
- Changes to configuration managed items are tracked and documented.
- Released baselines are created from the CM repository

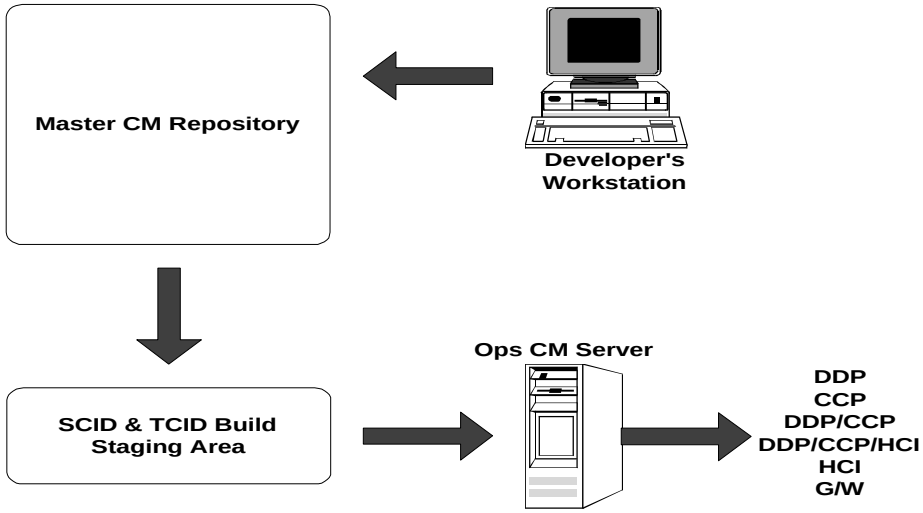

# Software Tools

## Selected CLCS Development Tools:

| | |
|---|---|
| • **Design Tool:** | **Paradigm Plus** |
| • **Drawing Tool:** | **Visio-Tech** |
| • **Documentation:** | **Microsoft Office** |
| • **Code Dev. Envr.** | **Pro-Dev (Silicon Graphics)** |
| • **Gateways:** | **VX-Works, Tornado** |
| • **Configuration Manager:** | **Razor** |
| • **End Item Manager:** | ***Java & Control Shell*** |
| | ***(EIM Pathfinders are in progress)*** |

# CSCI Assignments and Definitions

**Handouts:**

- CSCI Assignments
- CSCI Definitions